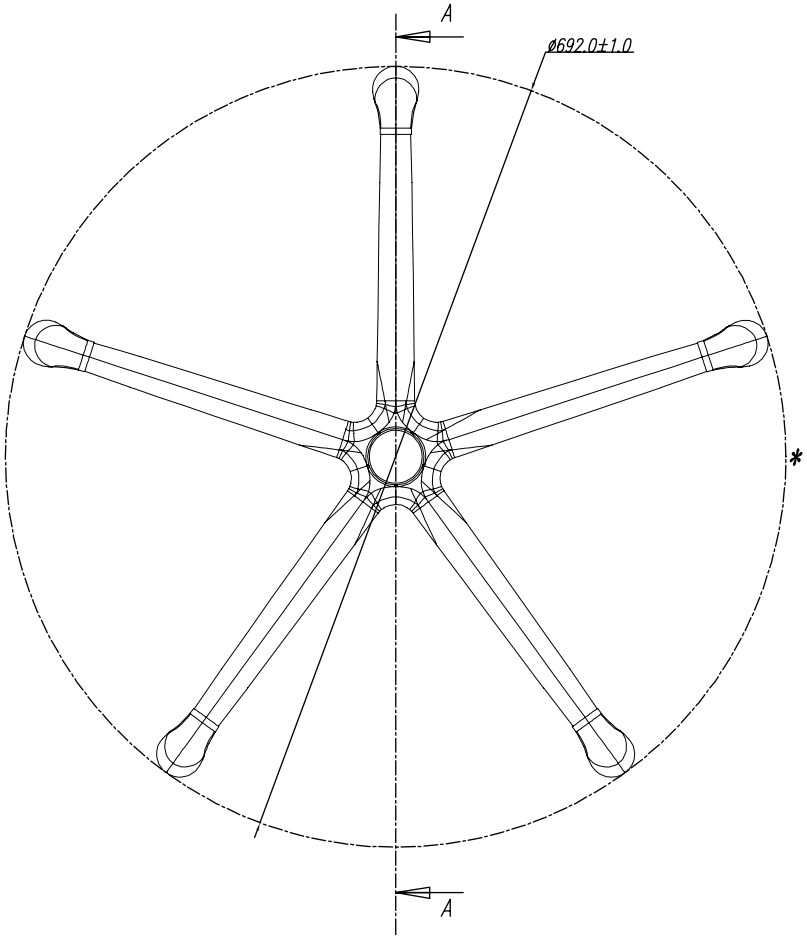

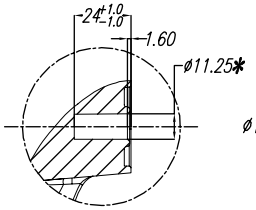

DETAIL C
SCALE 2:1

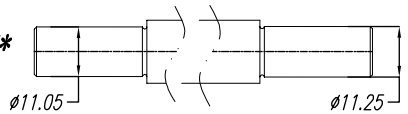

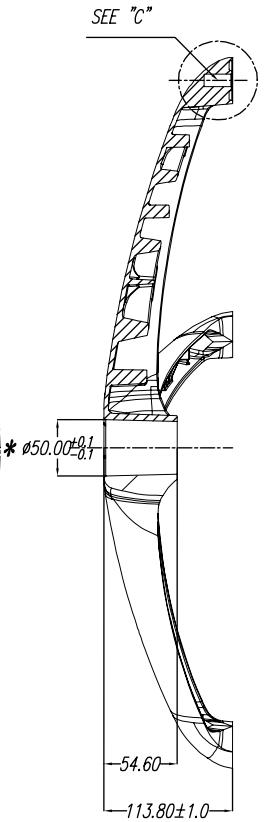

SECTION A-A

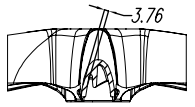

SECTION B-B

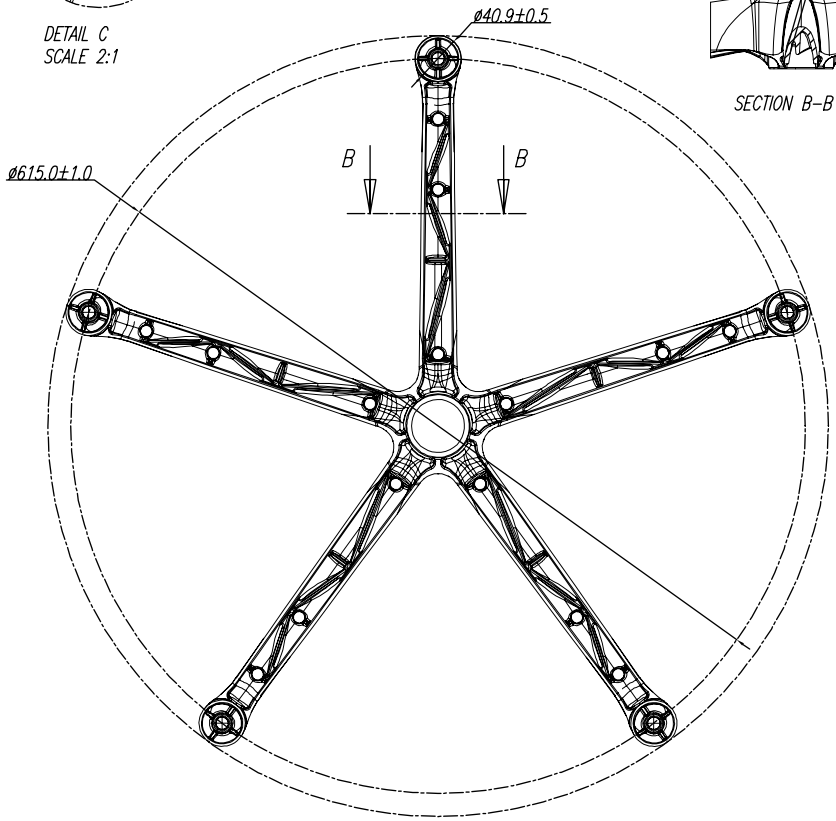

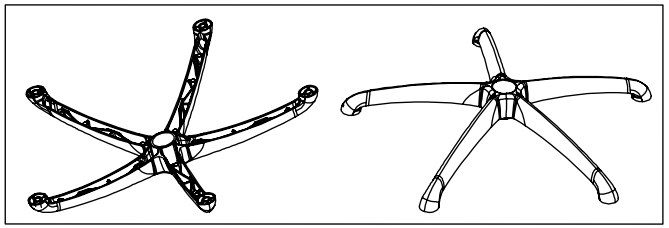

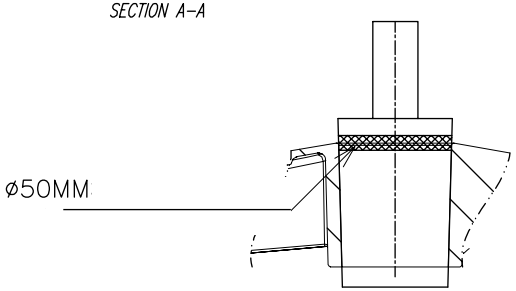

AB-645

ReSource Inc